Electrolux PROFESSIONAL

ITEM #

MODEL #

NAME #

SIS #

AIA #

Warewashing
NeoBlue Touch Undercounter DW (L) with pressure boiler, rinse aid+detergent pumps, drain pump, tank filters, max 65 r/h, 3ph



400342 (MTUCLG3) myPRO Undercounter Dishwasher (L), touch control, single skin with pressure boiler, rinse aid+ detergent pumps, drain pump, tank filters, max. 65 r/ h, 3 phase

Short Form Specification

Item No.

Undercounter dishwasher hot sanitation type, suitable for 500*500mm racks. Washing performance is ensure by a powerful wash pump, large capacity wash tank, upper and lower integrated washing & rinsing revolving spray arms in composite material. Rinse temperature and pressure guaranteed by built in pressure boiler and interlocked valves control system. Uses from 2.1 to 2.4 liters of clean water at final rinse. Two pre-settled automatic cycles for different types of wares, configurable on-site. The machine is supply with removable tank filters. Double skin insulated door. 304 AISI stainless steel construction to include internal tank and boiler, door and external panels. Electronic control with color coded user interface Touch Button type and LED info icons. Automatic self-cleaning cycle run after the machine is switched-off. The unit include drain pump, detergent and rinse aid dispenser peristatic pumps. Electrical characteristics to be 380-415 volts three phase 50Hz operation, equipped with electric cable. The machine is supplied with embedded connectivity Wi-Fi module and Bluetooth APP.

APPROVAL:

Main Features

- 4 second (variable) pause after washing and before rinsing ensures that no drops of unclean water will fall on the clean items at the end of the rinsing cycle.
- Fully automatic self-cleaning cycle avoids the risk of bacteria proliferation.
- IPx4 water protection.
- State-of-the-art electronic controls with built-in programming, self-diagnostics for serviceability and automatic interior self-cleaning cycle.
- Unique temperature interlock guarantees required temperatures in both the wash and final rinse in case of emergency cold water feeding.
- Built-in rinse aid and detergent dispenser with automatic initial and continuous cycle loading for perfect result while minimizing service and maintenance needs.
- Three phase or single phase electrical connection, convertible on-site.
- An effective rinse system uses only 2.1/2.4 liters of clean hot water per basket for lower running costs.
- Washing system endowed with rotating integrated washing & rinsing arms, high powered wash pump and large capacity boiler for professional washing.
- Simple service from the front for technical purpose, by top for electronic boards; by lower panel for main components.
- Max. theoretical washing capacity in ideal condition of 65 racks or 1170 dishes per hour, with fast cycle available on APP.
- The pump filter inside the tank protects the washing pump by soil penetration with its extended surface, keeping the washing water clean.
- The single piece upper & lower arms clip-on type, interchangeable, easy to remove & reinstall. The combined washing & rinsing spraying system guarantees extended water coverage inside the chamber for excellent washing performance.
- Smooth opening for easy loading.
- Touch button user interface provide useful information using different colours reflecting appliance status; and LED icons.
- App allows on-site customization of the washing cycles, as well as adjusting chemicals dosage. It provides on time feedback of the appliance and alarm info.
- Built-in pressure boiler sized to raise incoming 55-65 °C water to guarantee the right rinsing temperature for sanitizing rinse. No external booster is required.

Construction

- Unit to feature smooth surfaces to facilitate cleaning.
- Front and side panels, door and wash tank made in heavy duty anti-corrosive AISI 304 stainless steel.
- 304 stainless steel boiler with higher welding protection to increase resistance to corrosion.
- PVC water supply hose with metal connections

resistant to high water pressure.
- Completely closed on the back by a cover plate.
- Element protection from dry fire and low water.
- The boiler drain facilitates the evacuation of stagnant water after long periods of inactivity to ensure a higher level of hygiene.
- Large wash tank with round corners and no pipes to avoid dirt built-up.
- Incorporated drain pump to control water level in wash tank draining.
- Double skin insulated door.
- Light & thicker moulded tank filters in composite material prolong the cleanliness of the water, collecting the major part of the soil; that can be easily removed during operations.
- Unit to feature rinse aid and detergent dispenser pumps.

Sustainability

- Water consumption 2.1 lt/rack with MyEco cycle.
- Average energy consumption 260watt/cycle with MyEco Cycle.
- Reduced energy consumption up to 40% respect to previous range, equivalent to more than 3.000kWh saved in a year, and reduced water usage up to 2lt, both based on third part Lab verification* leading to only 0.08kg of CO_2 equivalent per cycle. (*Calculation by energy consumption during product usage (36 cycles/day for 300 days/year), considering a mix of energy sources as by calibrated EU database upd. values [kgCO2eq /KWh] - Source: IEA 2020 released in 2023 - The EIA Emissions Factors are specified for Electricity & Heat CO2 and include CH4 and N2O factors, according to IEA for 2021 also. Comparison made between NeoBlue Touch with MyEco cycle and the previous Electrolux Professional Undercounter range with 3lt water consumption/cycle).
- Product lifecycle extension thanks to easy access for service technician, dedicated diagnostic support and troubleshooting procedure and availability of spare parts for at least 10 years.
- Washing cycles and chemicals setup adjustable by App.
- ErgoCert 4-star certification for ergonomic design and ease of use. Simple operation through the user-friendly interface, and ergonomic design ensures minimal stress on the user. Colored touchpoints on removable components ensure fast cleaning operations.
- The cardboard packaging on pallet is fully recyclable. The cardboard is made of 70% recycled material, and FSC*-certified paper, printed with with eco-friendly ; to ensure complete sustainability and environmental responsibility. (* Forest Stewardship Council which is the world's leading organization for sustainable forestry-uses).

Included Accessories

- 1 of Yellow cutlery container PNC 864242
- 1 of Basket for 18 dinner plates - yellow PNC 867002

Optional Accessories

- Stand for undercounter dishwasher PNC 860418 ❑
- External detergent level probe kit PNC 864004 ❑
- External rinse aid level probe kit PNC 864005 ❑
- Filter for partial demineralization PNC 864017 ❑
- Kit to measure total and partial water hardness PNC 864050 ❑
- Yellow cutlery container PNC 864242 ❑
- Filter for total demineralization PNC 864367 ❑
- Rinse booster pump kit (50Hz) for NeoBlue Undercounter PNC 864492 ❑
- Drain pump kit for NeoBlue Undercounter PNC 864494 ❑
- Kit wash tank filters in composite material (1 central support and 2 filters) for NeoBlue Undercounter PNC 864495 ❑
- Half size basket universal PNC 864527 ❑
- Half size basket for plates PNC 864528 ❑
- Half size basket for glasses PNC 864529 ❑
- Kit 4 plastic boxes for cutlery - yellow PNC 865574 ❑
- Basket for 12 soup bowls - green PNC 867000 ❑
- Basket for 16 soup bowls/dinner plates - blue PNC 867001 ❑
- Basket for 18 dinner plates - yellow PNC 867002 ❑
- Basket for 12 plates up to 300 mm - blue PNC 867003 ❑
- Basket for 5 trays 530x325 mm - red, for undercounter, utensil dishwashers, hood type, rack type PNC 867006 ❑
- Basket for 48 small cups or 24 cups - blue PNC 867007 ❑
- Basket for 24 tilted cups - blue PNC 867008 ❑
- Cover rack for small and light items (500x500 baskets) PNC 867016 ❑
- Baskets for 16 tilted glasses (h 120 mm - diam 100 mm) - blue PNC 867020 ❑
- Basket for 16 vertical glasses (h 70 mm - diam 100 mm) - blue PNC 867023 ❑
- Basket for 16 tilted glasses (h 170 mm - diam 100 mm) - blue PNC 867030 ❑
- Baskets for 16 tilted glasses (h 220 mm - diam 100 mm) - blue PNC 867040 ❑

Recommended Detergents

- C11 Detergent for dishwashers; one pack of 2 cans of 5lt. PNC 0S2092 ❑
- C13 ECO Detergent for dishwashers; one pack of 2cans of 5lt. PNC 0S2093 ❑
- C12 Rinse aid for dishwashers; one pack of 2 cans of 5lt. PNC 0S2094 ❑
- C30 Multipurpose descaler; one pack of 2 cans of 5lt. PNC 0S2362 ❑
- C15 ECO Rinse aid for dishwashers; one pack of 2 cans of 5lt. PNC 0S2904 ❑

The company reserves the right to make modifications to the products without prior notice. All information correct at time of printing.

Electrolux PROFESSIONAL

Warewashing
NeoBlue Touch Undercounter DW (L) with pressure boiler, rinse aid+detergent pumps, drain pump, tank filters, max 65 r/h, 3ph

Front

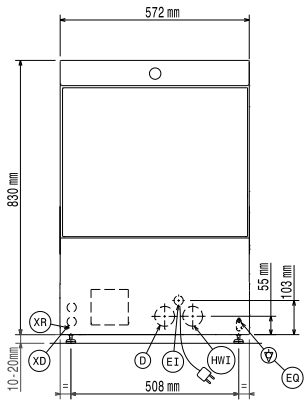

Side

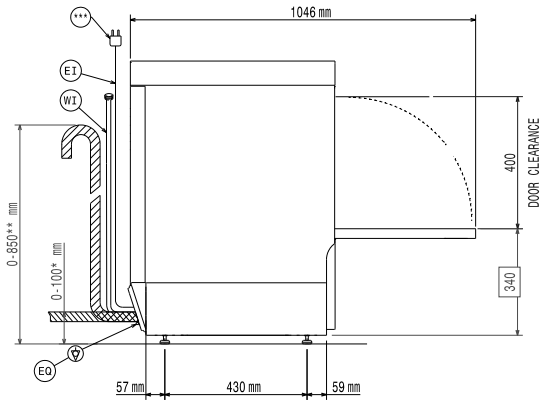

* Without drain pump

** With drain pump

***Plug only for Single Phase Machine

D = Drain
EI = Electrical inlet (power)
EO = Electrical Outlet
HWI = Hot water inlet
XD = Detergent connection
XR = Rinse aid connection

Top

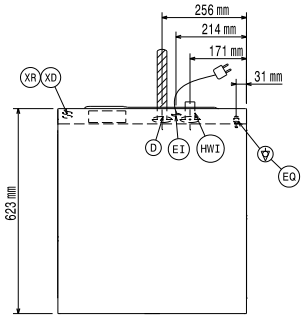

Electric

Supply voltage:	380-415 V/3N ph/50 Hz
Convertible to:	230V 3~; 230V 1N~
Default Installed Power:	5 kW
Boiler heating elements:	4,5 kW
Tank heating elements:	2 kW
Wash pump size:	0.55 kW

Water:

Pressure, min-max:	2-5 bar
Water supply temperature*:	55-65 °C
Drain line size:	20.5mm
Inlet Water supply pressure:	29 - 73 psi (2 - 5 bar)
Washing tank capacity (lt):	22
Water consumption per cycle (lt):	2.1 / 2.4
Boiler Capacity (lt):	5,8

Key Information:

*only available on App by Jan 2025

Baskets per hour (fast*/glasses*/ multipurpose&cups/intensive*/ MyEco):	65 / 40 / 36 / 24 / 15
Working cycles time (sec.):	55 / 90 / 100 / 150 / 240
Dishes per hour:	1170 / 720 / 648 / 432 / 270
Wash temperature:	55-65°C
Cell dimensions - width:	520 mm
Cell dimensions - depth:	540 mm
Cell dimensions - height:	400 mm
Rinse temperature:	60-85 °C
External dimensions, Width:	572 mm
External dimensions, Depth:	623 mm
External dimensions, Height:	830 mm
Packaging size (WxDxH):	740x670x1000 mm

Performance table (norm EN IEC 63136:2019)

Tested wash cycle:	myEco
Average cycle time (Tc), sec.:	447
Power ready-to-use mode (Pu), kW:	0.19
Energy consumption for initial fill (Es), kWh:	1.37
Water consumption for initial fill (Vs), l:	21.5
Number of plates per rack:	18
Cleaning performance (xclean), %:	99
Resoiling performance (xres):	0.3
Average energy consumption (Ec), kWh:	0.26
Average water consumption (Vc), l:	2.1
Average program time (Tpr), sec.:	262

Sustainability

Noise level:	<70 dBA
Package type:	Recycled cardboard box on pallet

The company reserves the right to make modifications to the products without prior notice. All information correct at time of printing.

2026.11.23